ABB MEASUREMENT & ANALYTICS | DATA SHEET | DS/ATS430-EN REV. J

Aztec ATS430

Turbidity and total suspended solids sensor



Measurement made easy

Certified turbidity measurement for regulatory effluent discharge consent monitoring

Easy to use
- EZLink™ plug-and-play digital sensor connection
- Automatic sensor recognition and setup
- Advanced predictive maintenance diagnostics
- Supplied factory calibrated ready for use

Accurate and reliable
- Robust construction in stainless steel or titanium
- Scratch-resistant sapphire windows
- Adaptive TSS calibration feature for improved process control
- MCERTS approved

- **Low cost-of-ownership**
- No servicing for the lifetime of the sensor
- In-situ cleaning
- Easy calibration and verification

Flexible installation options
- Suitable for pipe, tank, open channel, or flowcell installation
- Suitable for use in salt water

The Aztec 400 range

The Aztec 400 range of advanced digital sensors are designed for monitoring the key parameters in municipal and industrial water/wastewater treatment.

Featuring ABB's EZLink technology, the sensors offer plug-and-play measurement with ABB's latest digital transmitters to create the easiest-to-use and maintain monitoring systems on the market today.

Analysis and signal conditioning is conducted within the robust sensor housing and transmitted digitally to the transmitter.

The Aztec 400 range of digital sensors with EZLink offers:

- plug-and-play digital sensor connection
- automatic sensor recognition and setup
- advanced predictive maintenance diagnostics
- enhanced measurement accuracy due to minimal
- electrical noise interference.

ABB's latest range of digital transmitters featuring EZLink offers:

- multiple sensor connection
- data logging and graphical process trending
- full audit trail capability
- SD™ card/USB stick data download capability
- flexible communications including Ethernet, PROFIBUS®, Modbus® and analog outputs.



Figure 1 AWT440 transmitter

Aztec ATS430 turbidity and TSS sensor

The ATS430 is a compact, yet extremely robust turbidity sensor capable of measuring turbidity and total suspended solids (TSS) concentrations up to 4,000 NTU or 100,000 mg/L.

Available in stainless steel or titanium, these rugged sensors are suitable for use in a wide range of process control applications. The stainless steel version, with optional integral cleaning, is ideal for general water and wastewater applications, whereas the titanium version can be used in aggressive or corrosive environments, including brine, seawater, or high salinity media.

Analysis and signal conditioning is conducted within the robust sensor housing and transmitted digitally to the transmitter.

Featuring ABB's EZLink technology, simplified calibration and service-free design, users of this system benefit from simple operation, enhanced accuracy and the lowest cost-of-ownership.

Applications

Typical applications for the Aztec ATS430 turbidity and TSS sensor include:

- potable water treatment
- municipal/industrial wastewater treatment
- food and beverage process control
- pulp & paper process control
- marine applications.

Accurate and reliable measurement

The Aztec ATS430 turbidity and TSS sensor uses the latest advancements in optical measurement technology to provide an extremely stable and accurate measurement system that maintains calibration and operates without drift.

Measurement principle
The ATS430 uses nephelometric measurement technology in accordance with EN ISO 7027 (DIN EN 27027 or ISO 7027). Providing accurate measurement of turbidity concentrations up to 4,000 NTU and can also be used to determine the total suspended solids (TSS) content in the sample.

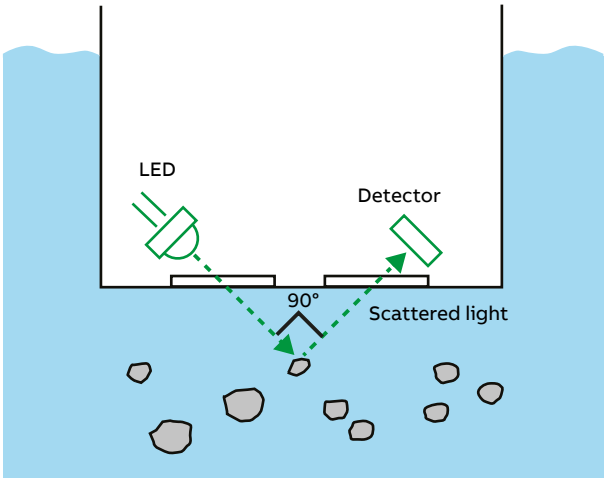

Figure 2 ATS430 probe uses internationally approved nephelometric measurement to provide accurate turbidity measurement

Adaptive TSS calibration
Obtaining a reliable calibration for suspended solids from laboratory measurement data is not necessarily a straightforward task. The adaptive TSS calibration feature within the ATS430 overcomes this issue and provides a smooth TSS conversion based on process history. It uses a weighted cumulative average to approximate the accuracy of a linear fit over a large set of data. This avoids sudden changes in TSS calibration coefficients often caused by non-representative sampling or erroneous lab results.

Rugged design
The robust ATS430 sensors are available in polished stainless steel or titanium, and feature scratch-resistant sapphire optical windows to withstand harsh environments up to 60 °C (140 °F) and pressures up to 10 bar (145 psi).

Automatic cell cleaning
Both the stainless steel and titanium versions of the ATS430 are available with an autoclean system to maintain accuracy in high-fouling environments. The integral wiper assembly physically wipes the optical surfaces at user-programmable intervals.

The highly efficient automatic cleaning process overcomes the problem of optical fouling, and ensures that performance can be maintained for extended periods without the need for manual intervention.



Figure 3 The autoclean system overcomes optical fouling

Trusted performance
The ATS430 has been certified by the UK Environment Agency under its Monitoring Certification Scheme (MCERTS).

Easy to use and maintain

The Aztec ATS430 turbidity and suspended solids sensor features ABB's EZLink technology to provide plug-and-play measurement with ABB's latest digital transmitters.

EZLink
No wiring, no complicated sensor setup or configuration; simply connect the sensor using the EZLink connection and the transmitter configures the sensor setup automatically.

Factory calibrated
Each sensor is precisely calibrated at the factory so it is ready to use straight out of the box.

No servicing for the lifetime of the sensor
The ATS430 features a fully encapsulated and hermetically sealed design. This means that there are no O-rings, seals, or gaskets to periodically replace.

If a wiper system is fitted, the ATS430 monitors usage and alerts the user when replacement is due. Wiper replacement is simple and takes a matter of seconds.



Figure 4 EZLink sensor connection

Simple to calibrate
The ATS430's performance can be easily verified with ABB's sensor verification and calibration kit. Each kit is provided with a range of different calibration disks that have been calibrated against primary turbidity standards at the factory.

Simple, safe, and cost-effective
The ATS430 sensor verification and calibration kit removes the need for the use of chemical standards that can be difficult to prepare, costly and hazardous.

Furthermore, as the kit can be used across different ATS430 sensors and each calibration disk can be reused, it is extremely cost effective.



Figure 5 ATS430 sensor verification and calibration kit

...Easy to use and maintain

...Simple, safe, and cost effective

The benefits of using the ATS430 sensor verification and calibration kit include:

- minimum analyzer downtime
  - simple and fast procedure to verify analyzer performance
- low cost of ownership
  - reduce usage of consumable chemical standards and the time taken to prepare such standards
- minimize employees' exposure to formazine
  - formazine is highly toxic and a suspected carcinogen
- repeatable and reliable
  - removes any chemical standard preparation errors
- simple to use
  - simply place the appropriate calibration disk into the holder, add a small droplet of optical coupling agent to the optical window of the turbidity sensor, and insert into the holder.



Figure 6 ATS430 easy calibration procedure

Mounting options

ABB offers a range of mounting options for the Aztec ATS430 sensor. Refer to Figure 7 on page 7.

Table 1 ATS430 sensor mounting/cleaning options

Item	Mounting option
Ⓐ	Open channel mounting kit: ATS4000768, suitable for floor/wall (surface) mounting (ATS4000720 chain mounting kit available separately)
Ⓑ	Wall mounting accessory: ATS4000700, suitable for 40 mm/1.25 in diameter dip pole
Ⓒ	Dip pole assembly (supplied with 40 mm diameter pole): ATS4000750: 2.5 m (8.2 ft) straight ATS4000716: 2.5 m (8.2 ft) 90° bend ATS4000719: 2.5 m (8.2 ft) 45° bend Dip pole mounting adapter kits (to attach to user-supplied pole) ATS4000751: for attachment to 40 mm diameter or 1.25 in NB pole (straight) ATS4000710: for attachment to 1.25 in NB pole (90° bend) ATS4000711: for attachment to 1.25 in NB pole (45° bend) ATS4000714: for attachment to 40 mm diameter pole (90° bend) ATS4000715: for attachment to 40 mm diameter pole (45° bend) **Note**. Handrail mounting brackets are not supplied with this kit and must be purchased separately.
Ⓓ	Open tank flanged dip mount: ATS4000785, for mounting on user-supplied mounting bracket
Ⓔ	Wiper arm protective shroud assembly: ATS4000725
Ⓕ	Flowcell pipeline mount kit: ATS4000765, suitable for wall/surface mounting (includes wall mounting clip)
Ⓖ	Handrail mounting bracket – swivel/tilt action: ATS4000762 for 1.25 in NB dip pole, suitable for 42 or 51 mm (1.7 or 2.0 in) diameter handrail ATS4000763 for 40 mm diameter dip pole, suitable for 42 or 51 mm (1.7 or 2.0 in) diameter handrail
Ⓗ	Handrail mounting bracket – tilt action: ATS4000760 for 40 mm or 1.25 in diameter dip pole, suitable for 42 or 51 mm (1.7 or 2.0 in) diameter handrail
Ⓘ	Retractable insertion assembly: ATS4000780, maximum pressure 10 bar (145 psi), for mounting on user-supplied flange: BS EN 1092-1, Type 01B, DN50, PN16, stainless steel 316L or similar. Maximum distance from flange sealing face to pipe ID must not exceed 70 mm (2.75 in).

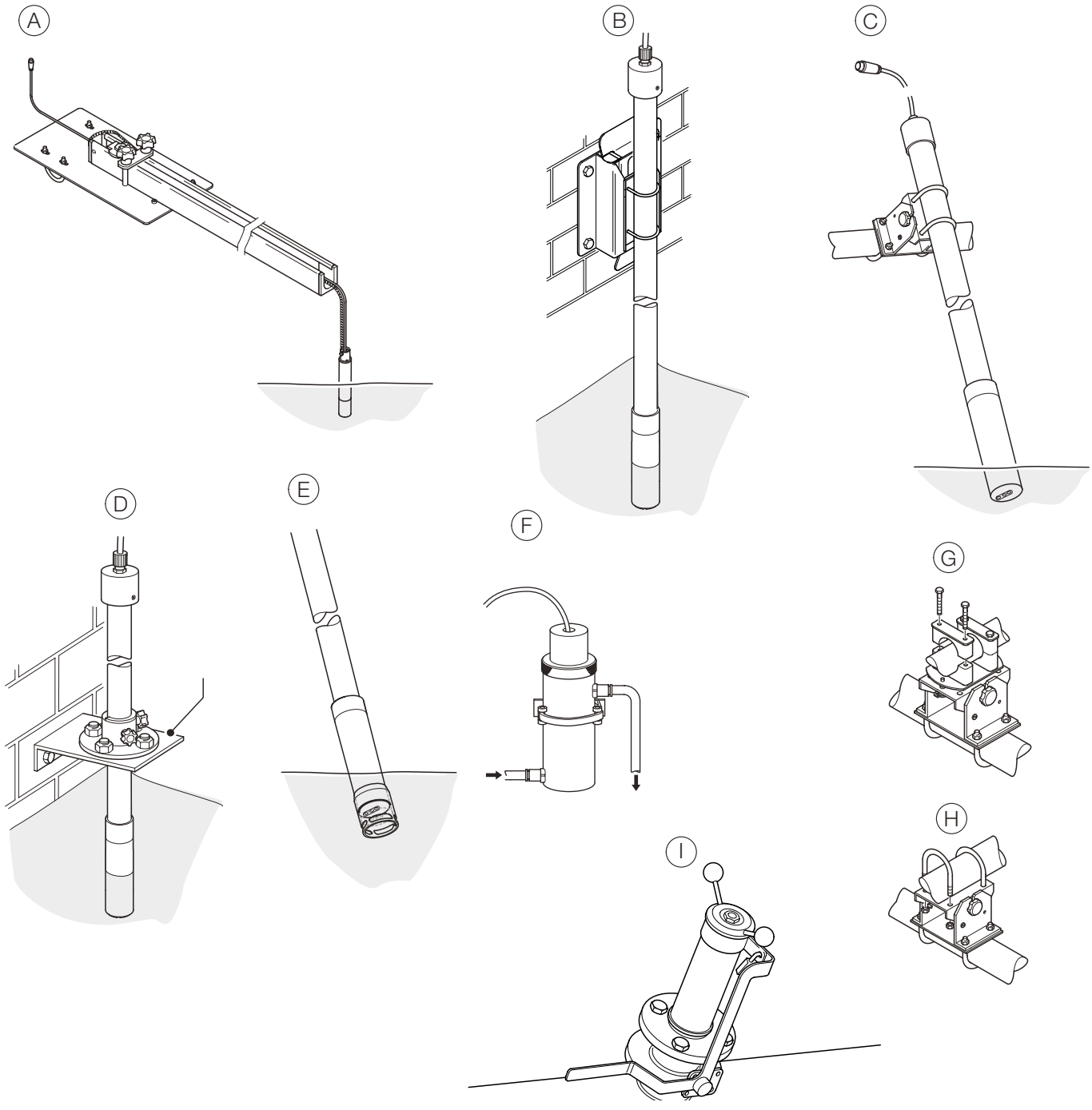

Figure 7 Mounting options

Specifications

Sensor type

Optical nephelometric turbidity and suspended solids sensor

Sensor

IP rating

IP68

Range

Turbidity: 0 to 4,000 NTU

Suspended solids: dependent on sample:

- up to 5,000 mg/L kaolin
- up to 15,000 mg/L Fullers earth
- up to 100,000 mg/L SiO_2

Accuracy [1] [2]

- Turbidity: <±2 % measured value
- Suspended solids: dependent on sample

Repeatability and limit of detection

- Repeatability: <1 %
- Limit of detection [3]: 0.006 NTU

Display resolution

- Turbidity: 0.001 NTU
- Suspended solids: 0.001 mg/L

Response time

T90 < 30 s with filtering disabled

Storage conditions

-5 to 70 °C (23 to 158 °F)

Operating temperature

0 to 60 °C (32 to 140 °F)

Operating pressure

Up to 10 bar (145 psi) for metal versions

Dimensions

180 × 40 mm (7.08 × 1.57 in)

Weight

- Stainless steel: approx. 0.65 kg (1.43 lb) without cable
- Titanium: approx. 0.4 kg (0.88 lb) without cable

Power

Consumption (maximum)

100 mA @ 24 V DC

Cable

Fixed length

1 or 10 m (3.28 or 32.8 ft)

EZLink digital sensor connector IP rating

IP67 (when connected)

Extension cable (options)

1, 5, 10, 15, 25, 50 m (3.2, 16.4, 32, 49.2, 82, 164 ft)

Maximum length (including optional extension cable)

Up to 210 m (689 ft)

Methods

ISO7027:1999, Water Quality – Determination of turbidity

Materials of construction

Stainless steel version

316 stainless steel, Viton®, Noryl® (wiper version only), sapphire, and F08 epoxy

Titanium version

Titanium grade 2, Viton, Noryl (wiper version only), sapphire, and F08 epoxy

Sensor flowcell body

ABS

Retractable insertion assembly

Parts in contact with sample

Stainless steel (316/1.4408), Viton, TFM™ 1600

1 Tested in accordance with MCERTS: Performance and Test Procedures for Continuous Water Monitoring Equipment. Version 3.1: Environment Agency 2010.

2 ± 0.1 NTU for measurement below 5 NTU, provided an accurate calibration is performed to compensate for environmental interferences. To achieve the best accuracy at low levels, a two-point calibration is advised.

3 Tested in accordance with BS ISO 15839: 2003.

Dimensions

All dimensions in mm (in)

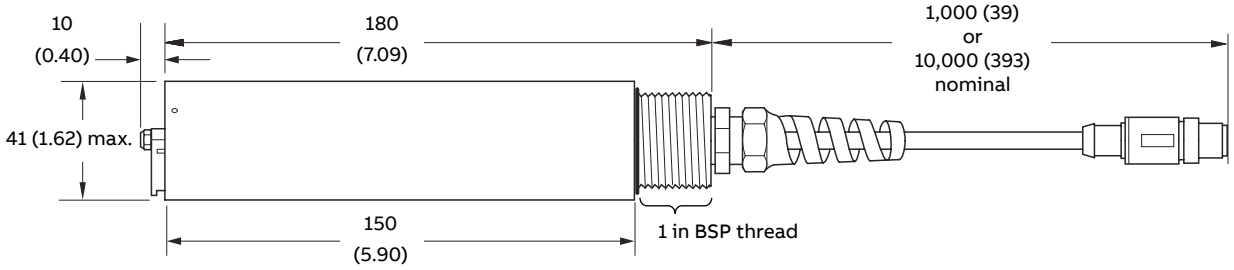

Figure 8 Sensor

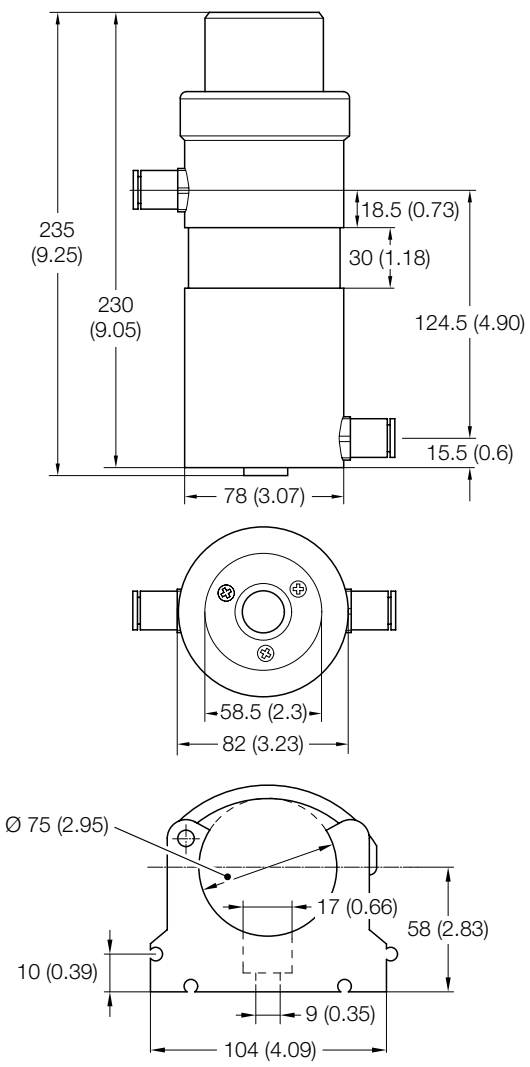

Figure 9 Flowcell

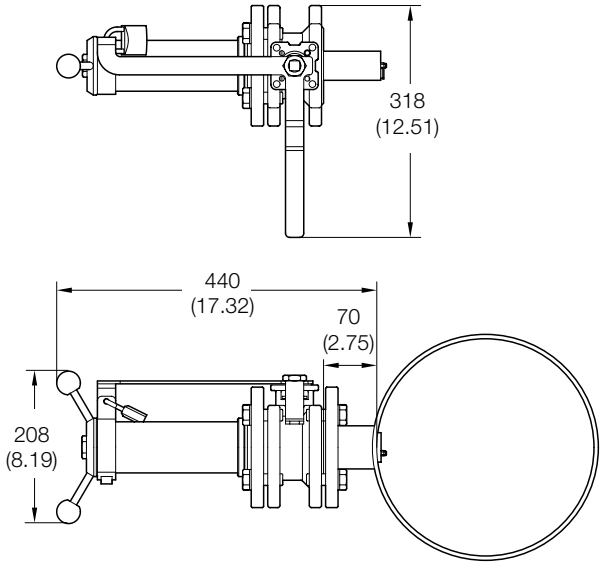

Figure 10 Retractable insertion assembly

Ordering information

Aztec ATS430	ATS430/	X	X	XX	XX	Options
Build revision						
Reserved		A				
Sensor type						
Stainless steel			1			
Stainless steel with wiper			2			
Titanium			3			
Titanium with wiper			4			
Cable length						
1 m (3.2 ft) cable				A1		
10 m (32.8 ft) cable				A2		
Documentation language						
German					M1	
Italian					M2	
Spanish					M3	
French					M4	
English					M5	

Optional ordering codes
Add one or more of the following codes after the standard ordering information to select any additional options if required:

Accessories	
Sensor verification and calibration kit	A4
Calibration pot for use with formazine	A5
Wiper arm protection shroud	A6
Mounting options	
Dip pole assemblies	
Dip pole assembly (straight), metric 2.5 m (8.2 ft)	BA1
Dip pole assembly (90° bend), metric 2.5 m (8.2 ft)	BA4
Dip pole assembly (45° bend), metric 2.5 m (8.2 ft)	BA5
Dip pole mounting adapter kits (to attach to user-supplied pole)	
Pole mounting adapter kit (straight) for attachment to 40 mm or 1.25 in NB pole	BD1
Pole mounting adapter kit (90°) for attachment to 1.25 in NB pole	BD2
Pole mounting adapter kit (45°) for attachment to 1.25 in NB pole	BD3
Pole mounting adapter kit (90°) for attachment to 40 mm pole	BD4
Pole mounting adapter kit (45°) for attachment to 40 mm pole	BD5
Dip pole mounting brackets	
Wall mounting bracket for dip pole (40 mm or 1.25 in NB)	BB1
Handrail mounting bracket (tilt) for dip pole (40 mm or 1.25 in NB), suitable for 42 or 51 mm (1.7 or 2.0 in) diameter handrail	BB2
Handrail mounting bracket (swivel & tilt) for dip pole (1.25 in NB), suitable for 42 or 51 mm (1.7 or 2.0 in) diameter handrail	BB5
Handrail mounting bracket (swivel & tilt) for dip pole (40 mm), suitable for 42 or 51 mm (1.7 or 2.0 in) diameter handrail	BB6
Open tank flanged mount for dip pole (40 mm or 1.25 in NB)	BT1
Chain mount options	
Open channel mounting kit supplied with 3 m (9.8 ft) chain	BB3
Chain fitting adapter kit supplied with 3 m (9.8 ft) chain	BB4
Pipe mount options	
Flowcell	BF1
Retractable insertion assembly	BH1
Certification	
Calibration certificate	CD
EZLink digital sensor extension cable	
1 m (3.2 ft)	E01
5 m (16.4 ft)	E05
10 m (32.8 ft)	E10
15 m (49.2 ft)	E15
25 m (82 ft)	E25
50 m (164 ft)	E50

Acknowledgements

- EZLink is a trademark of ABB Limited
- Modbus is a registered trademark of Schneider Electric USA, Inc.
- Noryl is a registered trademark of SABIC Innovative Plastics IP B.V.
- PROFIBUS is a registered trademark of PROFIBUS Nuterorganization e.V.
- SD is a trademark of SD-3C LLC
- TFM is a trademark of Dyneon
- Viton is a registered trademark of The Chemours Company FC LLC

Sales

Service

Notes

ABB Measurement & Analytics

For your local ABB contact, visit:
www.abb.com/contacts

For more product information:
www.abb.com/measurements

We reserve the right to make technical changes or modify the contents of this document without prior notice. With regard to purchase orders, the agreed particulars shall prevail.
ABB does not accept any responsibility whatsoever for potential errors or possible lack of information in this document.

We reserve all rights in this document and in the subject matter and illustrations contained therein. Any reproduction, disclosure to third parties or utilization of its contents – in whole or in parts – is forbidden without prior written consent of ABB.

© Copyright 2023 ABB.
All rights reserved.

DS/ATS430-EN Rev. J 04.2023