PRODUCT BASIC INFORMATION

VMH FLEX

Easy to install, easy to customize, easy to use.



VMH FLEX

Tiny device / endless possibilities

GENERAL FEATURES

- Up to 5 scrollable screens in single or dual layout
- Innovative laser touch-button reliable in every practical condition
- CAN bus connectivity (NMEA 2000® or J1939)
- 2x analog inputs for direct sensor connections
- LIN port for Intelligent Battery Sensor
- Wireless configurable with your smartphone



Small but powerful, the **VMH FLEX** is the perfect compromise to display a large amount of boat data in a compact device. No matter if you are wearing gloves or if it is raining on your deck, the innovative laser touch-button allows you to scroll up to five different screens. Every screen can be freely customized with your most important information, and the setup – including alarms – is easily done with your smartphone just with a »tap«.

Capable of reading from both sensors and CAN the **VMH FLEX** is further empowered by the LIN connectivity to get all the information from your battery thanks to the Intelligent Battery Sensor.

DISPLAY LAYOUT



OPERATION DISPLAY

- **Single-data layout** – numeric value display with ISO symbol, unit and visual colored bar graph.
- **Dual data layout** – dual numeric value display with ISO symbols and unit.



ALARM DISPLAY

- **Single-data layout –** the bargraph turns red, a red alarm symbol is displayed in the top part of the display
- **Dual data layout –** the numeric digits of the affected data become red

TECHNICAL DATA

Display	1.44" sun-readable color **TFT display**
Resolution	125 x 125 pixels
Lens	**Mineral glass front lens** with brushed stainlesss-steel bezel
Configuration	**Wireless configurable** via smartphone
Housing	Standard **Ø 52 mm** round housing, flame retardant material
Connector	Automotive-grade Molex connector 8 poles
Power supply	9 – 36 Volt **(12/24 nominal)** with overvoltage and reverse polarity protection
Current consumption	65 mA (at full brightness, @12 V)
Analog ports	**2x Resistive inputs** (1x 0-400 Ohm / 1x 0-1500 Ohm) – to support a large variety of sensors like Tank level, Temperature, Pressure, Rudder and Trim sensors
Digital ports	**CAN port** – NMEA 2000® or SAE J1939 depending on the variant, **LIN port** – Intelligent Battery Sensor connection
Wireless interface	Airwave (NFC-Based)
Operating temp	-20°C to +70°C
Storage temperature	-30°C to +80°C
Protection class	IPX7 front and back



Reliable performance in outdoor environments

Up to 10 different displayed data on five scrollable screens



ART. NR. B00186401

NMEA 2000®

FEATURES

- DeviceNet NMEA 2000® M12 connector on harness included
- NMEA 2000® marine protocol implemented on CAN
- **Analog to NMEA 2000® converter included to send data and alarms to the boat network!**

SUPPORTED DATA

Battery SOC	Coolant Temp	Trim
Battery SOH	Coolant Press	Depth
Battery Temp	Boost Press	Clock
Battery Autonomy	Engine Oil Temp	Sea Water Temp
Ammeter	Engine Oil Press	Trim Tabs P/S
Voltmeter	Transm Oil Press	Fuel Rate
Alternator Potential	Transm Oil Temp	Ext Air Temp
Engine Speed	Fuel Level	Exhaust Gas Temp
Hour Counter	Waste Water Level	
Boat Speed	Fresh Water Level	
SOG	Black Water Level	
COG	Rudder Angle	

ART. NR. B00127801

SAE J1939

FEATURES

- **SAE J1939 protocol implemented on CAN port**
- Open-end wiring harness
- DM1 diagnostic messages from the engine with SPN and FMI display

SUPPORTED DATA

Battery SOC	Fuel Pressure	Fuel Level
Battery SOH	Engine Oil Level	External Air Temp
Battery Temp	Engine Oil Press	Trip Distance
Battery Autonomy	Coolant Pressure	Total Distance
Percent Load	Coolant Level	Wheel Based Speed
Engine Speed	Fuel Rate	Power Takeoff Speed
Catalyst Tank Level	Inst. Fuel Economy	Clock
Total Engine Hours	Boost Pressure	Transm. Oil Level
Trip Fuel	Exhaust Gas Temp	Transm. Oil Pressure
Total Fuel	Battery Current	Transm. Oil Temp
Coolant Temp	Alternator Potential	Brake Primary Press
Engine Oil Temp	Battery Potential	Water Level





Get it on Google play

Available on the App Store



Configured right out of the box, a powerful advantage, a true time saver

- Configure the device on your mobile and **"tap" your smartphone onto the front lens** of the instrument to instantly program it.
- **No additional hardware** interface is required.
- Thanks to the passive Airwave receiver, the **VMH Flex does not require power** to be programmed.
- **Configurable Parameters: Display Layout** (single/dual); **Data Type**; **Data Instance** (Engine No./Tank No.); **Sensor Calibration** (standard/customized); **Alarms setup**; **Illumination intensity** (day/night); **Units.**
- **Define your own sensor curve**

SPECIFICATIONS

All dimensions in mm

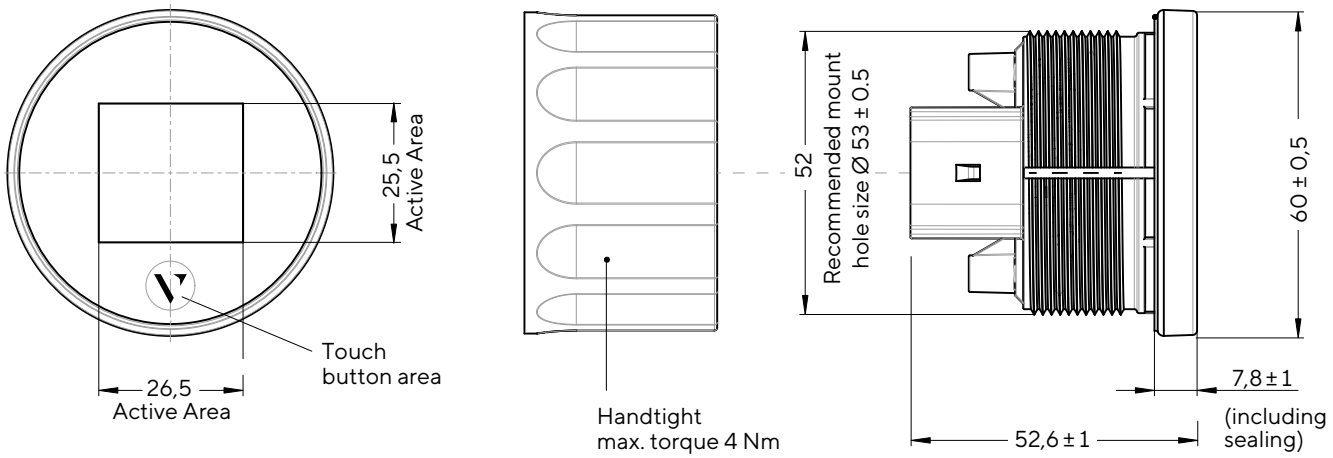

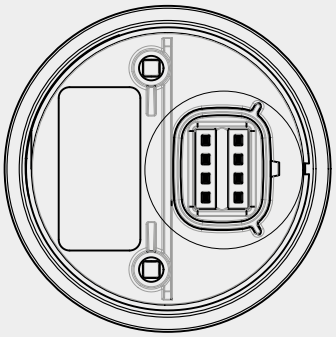

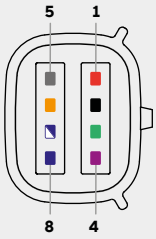

Rear view
Molex MX 150,
8 poles-connector

PIN	SIGNAL
1	Term. 15 – Power 12/24 V
2	Term. 31 – Ground
3	Sensor input – Resistiv 2 (0-1500 Ω)
4	LIN bus
5	Sensor input – Resistiv 1 (0-400 Ω)
6	Illumination Day/Night
7	CAN high
8	CAN low

3D VIEW

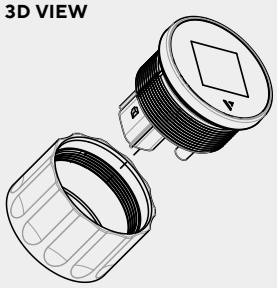

ACCESSORIES	ARTICLE NR.
Spinlock nut 52 mm	A2C5205947101
Rubber gasket 52mm	A2C53194838
Wire harness - J1939 Version	B00181701
Wire harness - NMEA Versions	B00181801
Adapter Cable IBS 12 V	B00090601
Adapter Cable IBS 24 V	B00090701

OUTDOOR INSTRUMENTATION
ENGINEERED IN SWITZERLAND

Veratron AG / Industriestrasse 18 / 9464 Rüthi / Switzerland
T +41 71 7679 111 / info@veratron.com / veratron.com

The information provided in this brochure contains only general descriptions or performance characteristics, which do not always apply as described in case of actual use or which may change as a result of further development of the products. This information is merely a technical description of the product. It is not meant or intended to be a special guarantee for a particular quality or particular durability. An obligation to provide the respective characteristics shall only exist if expressly agreed in the terms of contract. We reserve the right to make changes in availability as well as technical changes without prior notice.

Veratron AG / English © 2026