“TEK invisible sensor for new scenarios you YACHT”





Working on the Lower Deck celing to control the Main Deck



MARINE® TEKNOLOGY
Tuscany ITALY

www.marineteknology.com

Via della Fogliaia, 18, CAP 50041 - Calenzano - Firenze - ITALY
+39 055 8877210 | info@marineteknology.com

MARINE® TEKNOLOGY
Tuscany ITALY

www.marineteknology.com

TEK

Driven by Metstrade
DAME DESIGN AWARDS
NOMINEE 2025
Category Security Aboard

“invisible detection sensors for yachts”

**It is an increasingly requested option in the nautical sector.
The size of ships is growing and the demand for super/mega yachts equipped with “TEK” detection sensors for controls and commands on board the ship is growing.**

This patented system offers the advantage of being installed on the ceiling below the areas to be alarmed, e.g. boarding gangway, cockpit, corridor, stairs, reserved rooms, detecting unwanted transits and stops but with full freedom of movement in the remaining spaces; all made invisible by the furnishing closure of the false ceiling.

TEK is reliable, invisible, does not wear out, does not oxidise, does not require maintenance, interfaces with existing systems on board.
The innovative application of **“TEK”** detection sensors offers builders, planners and designers a reliable and invisible technological solution, both to expand functional innovations for super/mega yachts and to create new security, lighting, signaling and control scenarios to offer to shipowners.



Exterior main deck door saloon yacht with invisible TEK alarm

DETECTOR TEK: INVISIBLE PROTECTION FOR YACHT

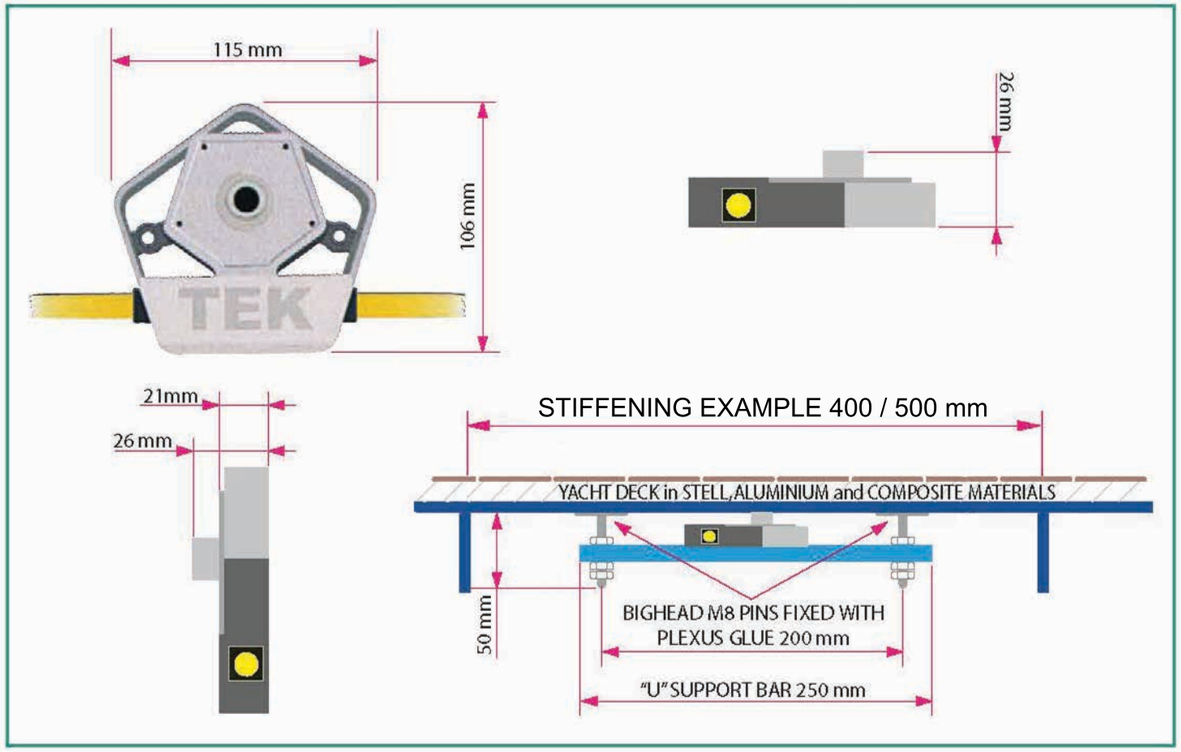

FASTENING



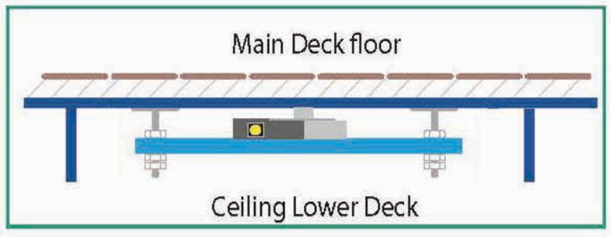

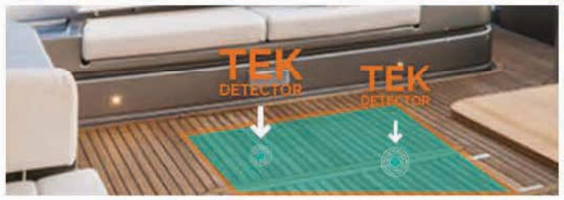



TEK lights up the night



APPLICATION

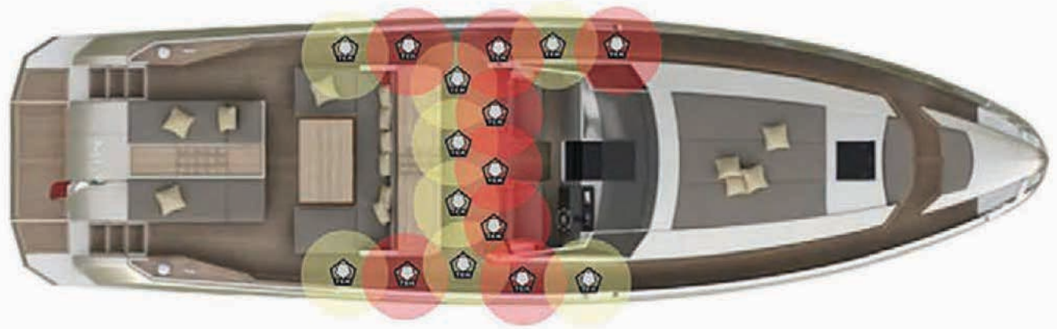

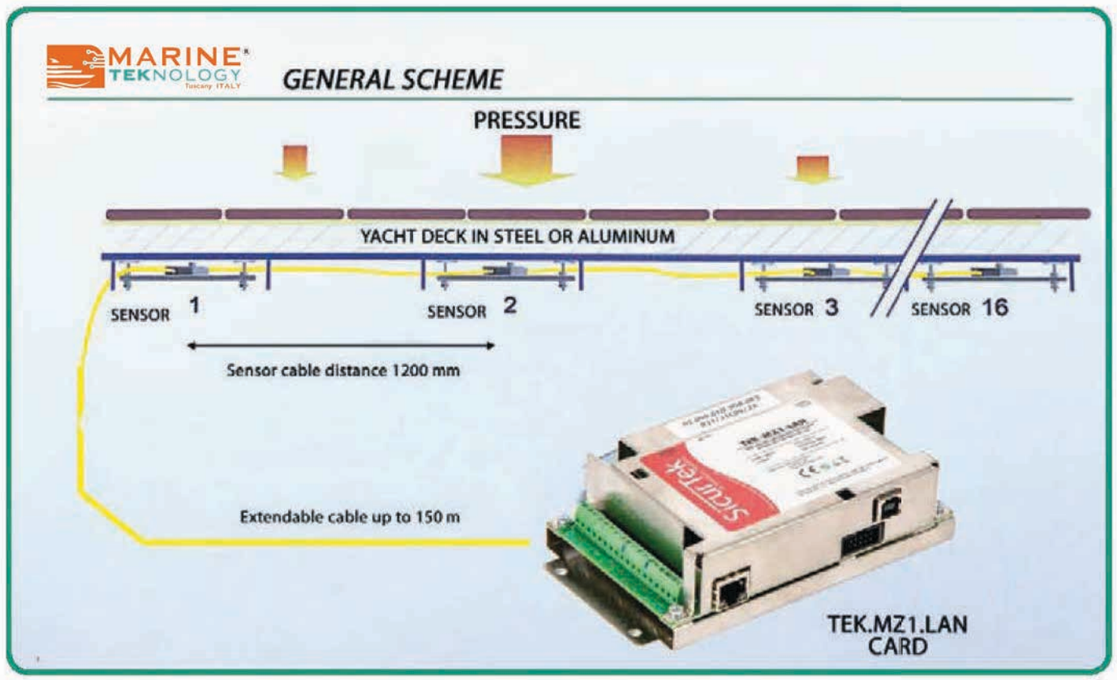

TEK.MZ1.LAN CARD TECHNICAL FEATURES

• Card size	160 x 90 x 40 (L x H x P)
• Package dimensions	192 x 95 x 50 (L x H x P)
• Net weight	240 g.
• Gross weight	368 g.
• power supply	12Vcc (+/- 25%)
• Electrical absorption	110 mA (Max)
• Operating temperature	- 25 ÷ +80 °C
• Relative humidity	< 95% non-condensing
• Analysis capacity	1 sensor module
• Input	2 digital inputs, opto-isolated, programmable by software.

N.C. OUTPUTS Positive Safety - Solid State Relay - 48 Volt - 50 mA

- 1 for sensor module alarm
- 1 for sensor module pre-alarm
- 1 for tampering with the sensor module
- 1 for to insufficient power supply, service activity in progress.

Service software license included