energy recovery®

BEYOND SEAWATER: LOW-PRESSURE PX SERIES

Energy Recovery Solutions for Low-Pressure RO Systems



The Low-Pressure PX (LP PX) is an energy recovery device uniquely designed for low-pressure reverse osmosis and nanofiltration systems, providing a sustainable, affordable path to save operational energy.

Recovering and transferring pressure energy in **low-pressure RO systems (5.5–31 bar)** across wastewater, water reuse, and process water applications, **the LP PX delivers up to 30% energy savings** while reducing operating costs and carbon emissions. Suitable for use in brackish water reverse osmosis, industrial and municipal water reuse, and wastewater treatment RO systems, the LP PX performs under variable flow, recovery, pressure, feed TDS, and temperature conditions.

Configurations to Match New or Existing Systems

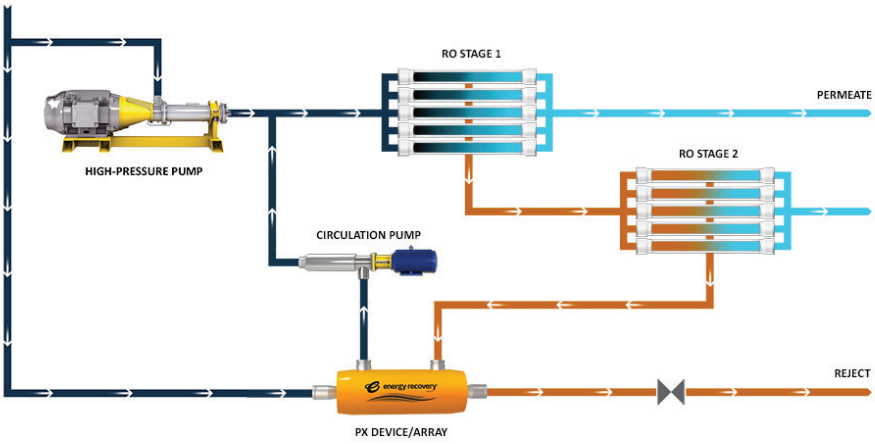

Power Model Pro *is a product configurator tool that allows you to predict equipment performance, estimate energy consumption, and optimize efficiency of a reverse osmosis system using our products. To register, visit:* *energyrecovery.com/resources/power-model-pro.*



BENEFITS*

- **Reliable:**
  - Industry-leading reliability with **99.8% uptime**
- **Flexible:**
  - Isobaric device with stable efficiency across variations in flow and pressure **(5.5 - 31 bar; 80 - 450 psi)**
  - Compact, modular, and scalable to any flow capacity **(7 - 59 m^3/h; 30 - 260 gpm)**
  - Easy to implement in new and existing RO systems
- **Efficient:**
  - Up to 95% peak efficiency

**Actual results may vary.*

Field-Proven Energy Savings

From municipal potable water in Switzerland to direct potable reuse in Belgium and industrial wastewater reuse in China, with additional installations across the United States, India, and Brazil, the LP PX is delivering measurable energy savings in real low-pressure RO plants on four continents today.



23% Lower energy consumption

MUNICIPAL REUSE · BELGIUM

Hofstade Direct Potable Reuse

The LP PX reduced energy consumption by ~23% at one of Europe's first direct potable reuse systems, which delivers 400 million liters of drinking water per year to 12,000 people.

25% SEC Reduction

INDUSTRIAL REUSE · CHINA

Tangshan Wastewater Reuse Plant

Two LP PX devices retrofitted onto one RO train at a 37,000 m^3/day industrial reuse plant cut high-pressure pump consumption by ~25% and avoided an estimated 265 tons of CO_2 per year.





30% Lower energy consumption

MUNICIPAL POTABLE WATER · SWITZERLAND

Lake Biel Treatment Plant

Utility ESB and OEM Membratec redesigned a potable water plant serving 70,000 residents around Lake Biel, integrating up to 16 LP PX units to drive permeate SEC below 0.6 kWh/m^3 and save an estimated $120,000 USD/year.

Energy Recovery (Nasdaq: ERII) designs and manufactures world-class energy-saving technology for critical infrastructure that communities rely on every day, driving a more resilient and sustainable future. Grounded in more than 30 years of leadership in the desalination industry, today we use our proprietary pressure exchanger technology to help customers in multiple industries improve their operations and lower their emissions. Headquartered in the San Francisco Bay Area, we operate manufacturing and R&D facilities throughout California, with sales and on-site technical support available globally. For more information, please visit www.energyrecovery.com or email wastewater@energyrecovery.com.

energy recovery®

©2026 Energy Recovery
June 2026