CHLORTAINER®
TOTAL CONTAINMENT SYSTEM





Ton Container Loaders for Single Ton and Double Ton ChlorTainer® Vessels

Single Ton Tank Loader



- Ton Container Loaders are for use with single ton and double ton vessels.
- Customizable dimensions and compact design to accommodate your specific floorplan.
- Effortless loading and unloading of ton containers with left and right shifting capabilities.
- Easily add on additional track for expansions and multiple vessel configurations.
- Easy installation. Bolts down to the ground with leveling jacks and floor anchors.
- Provides safety for the operator. Engineered ergonomics reduce potential operator injury.

Dual Side By Side Tank Loader



Our loaders are designed to allow an operator to insert and extract one or two 1-ton containers into a ChlorTainer Total Containment vessel with minimal human exertion. The loader can be configured as a single or multi-position system, allowing it to load and unload adjacent vessels side-by-side or opposite each other. Multi-position cart systems include manual loading pins at each position to assure proper alignment with the vessel. The rolling cart locks in place for operator safety and for proper vessel entry/exit alignment. The large diameter rollers on the re-orientation stand help to easily position the container valves in the vertical position with minimal effort.

Double Ton Tank Loader

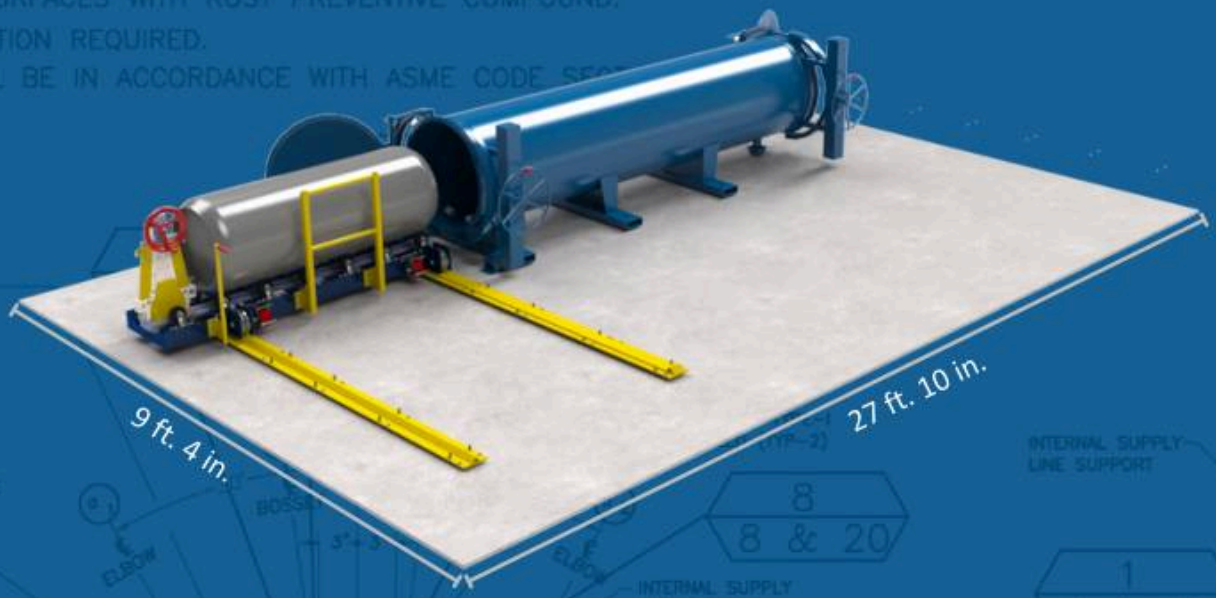

Double Ton Side-by-Side / Opposite Side Tank Loader

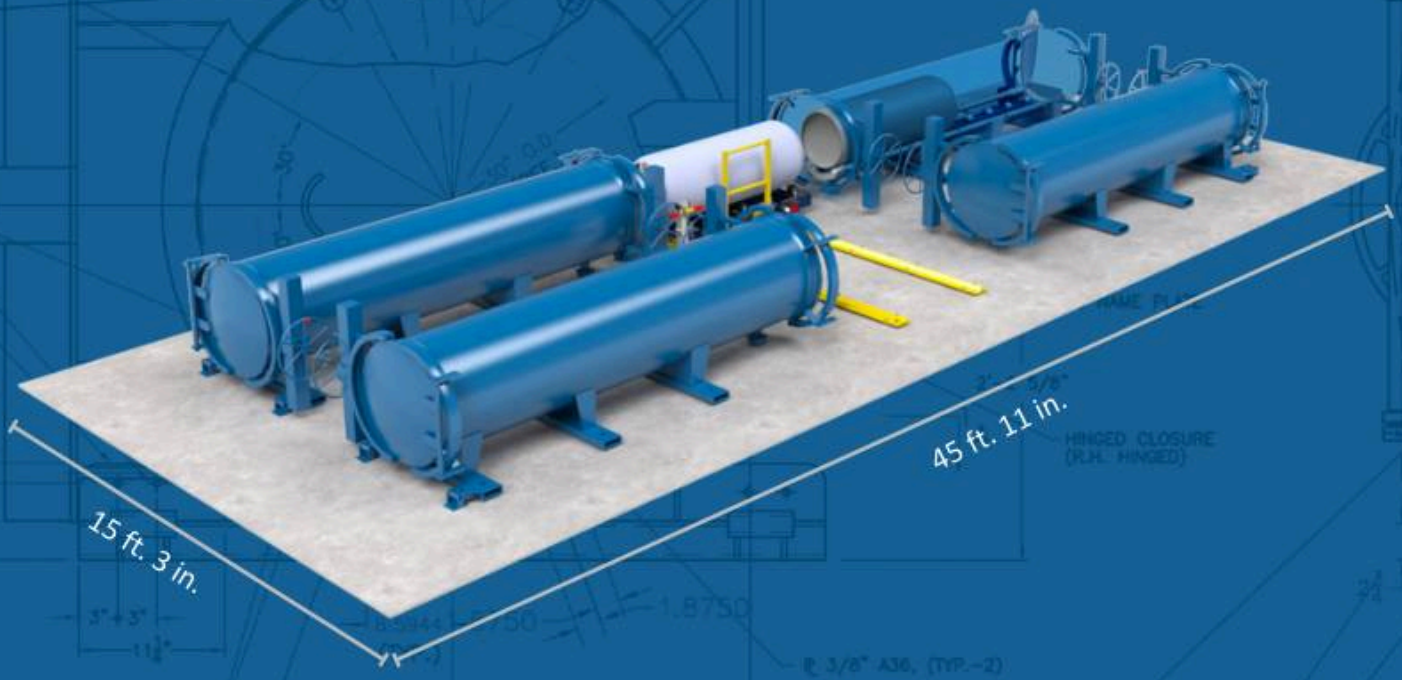

CHLORTAINER
TOTAL CONTAINMENT SYSTEM

sales@ChlorTainer.com
www.ChlorTainer.com
(800) 543-6603

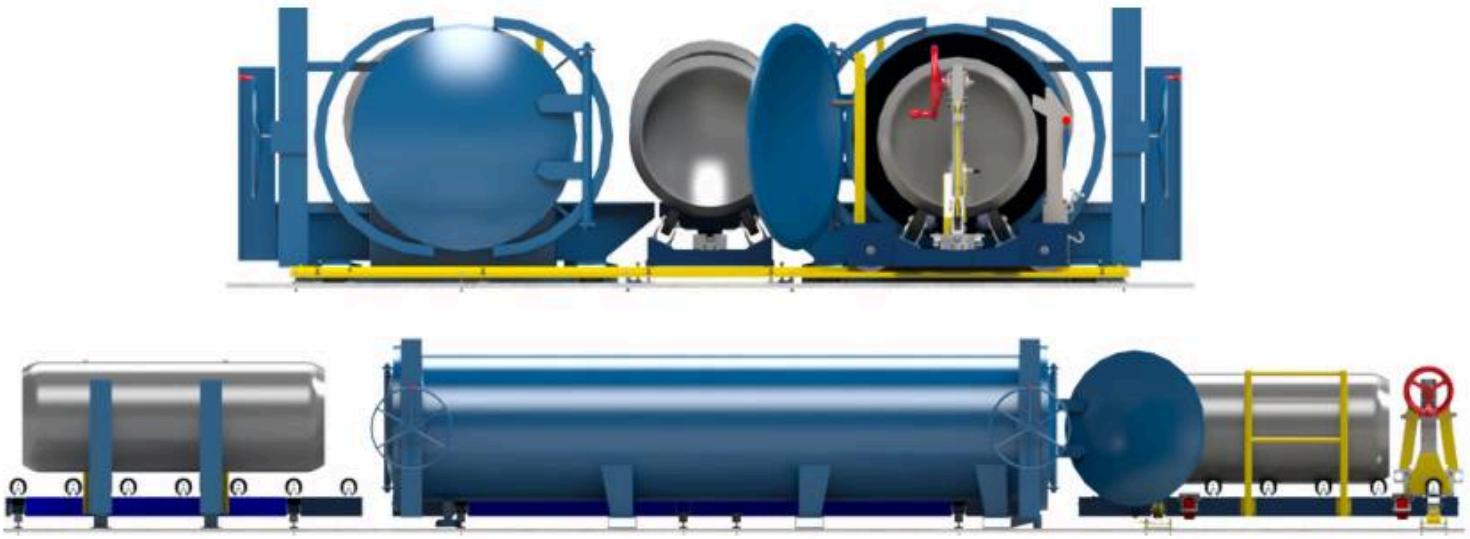

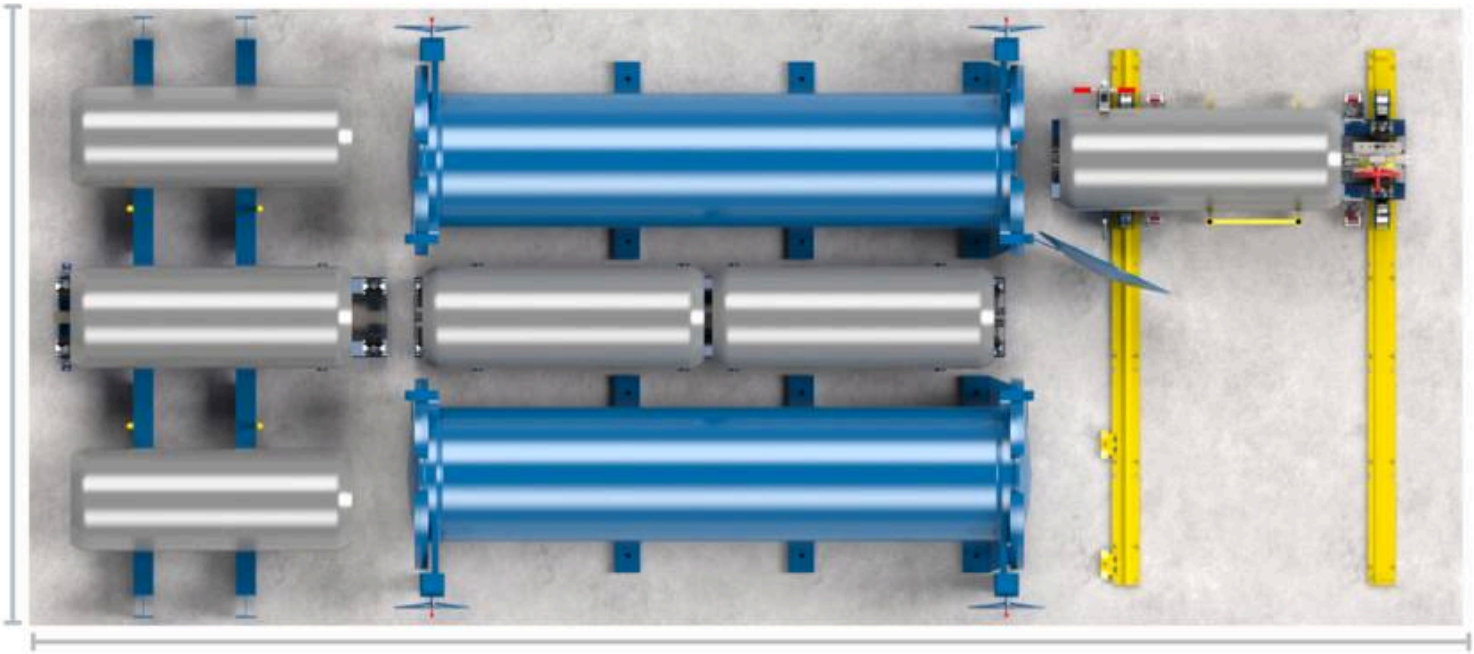

- Designed for indoor use. Outdoor options are available using all stainless steel components.
- For high volume use of hazardous chemicals, double ton configurations can provide maximum security and safety for your facility. Loader is included with Double Ton vessels.
- Life expectancy is 30 years with minimal required maintenance.
- Made in the USA.